ENG EK 307: Electric Circuits
Homework 11
Due Wednesday 12/10/2025 by 11:59 pm

Reading: *Alexander and Sadiku* (AS), Sec. 11.1-4, 14.1-4, 14.7, 14.8, 14.

Problem 1 (20 points)

a) Design a passive *RLC* bandpass filter with bandwidth B = 20 rad/s and center frequency ω_o = 1000 rad/s. Let R = 10Ω. I.e., Sketch the circuit, indicate element values. You may use formulas from the slides or textbook.

b) Sketch the Bode magnitude plot $H_{dB} = 20\log_{10}|\mathbf{H}|$ for this circuit, indicating the location of ω_o, ω_{c1}, ω_{c2}

Problem 2 (15 points)

For the band-stop filter depicted below, compute the 3-dB bandwidth of the stop-band, and the center frequency ω_o. You may use formulas from the slides or textbook.

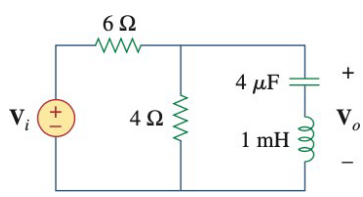

Problem 3 (15 points)

The circuit below is a high-pass filter. Find the transfer function for this circuit. Indicate the pass-band gain and the cut-off frequency.

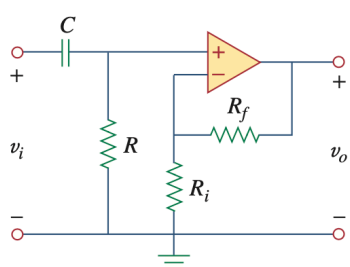

Problem 4 (15 points)

a) Write the transfer function $\mathbf{H}(\boldsymbol{\omega})$ for a first-order low-pass filter that has a pass-band gain of 10, and a cut-off frequency of 50 rad/s.

b) In the circuit below, choose values for $\boldsymbol{R_i}$, $\boldsymbol{R_f}$, and C to implement this transfer function (there are infinitely many solutions, choose reasonable parameter values)

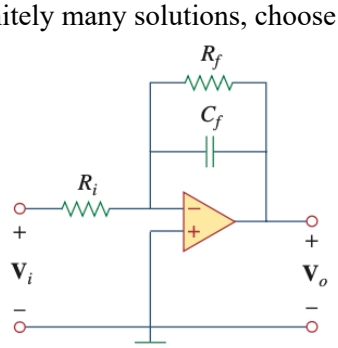

Problem 5 (20 points)

In Lab 7 you created a circuit to detect a heartbeat. The second stage of the circuit was, in fact, a filter designed to attenuate unwanted low-frequency and high-frequency interference. That filter stage is shown below.

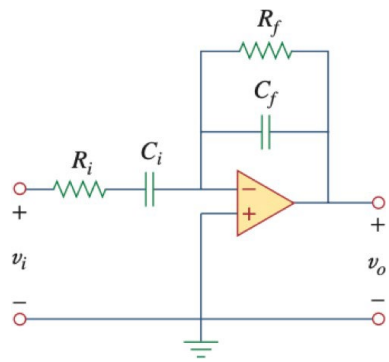

a) Using the parameter values you used in Lab 7, find an expression for the transfer function $\mathbf{H}(\omega) = \mathbf{V_o}/\mathbf{V_i}$. You should be able to express $\mathbf{H}(\omega)$ as a product of three terms:
a gain term $-R_f/R_i$, a first-order low-pass filter, and a first-order high-pass filter.

b) For this architecture, the low and high cut-off (corner) frequencies can be approximated as the corner frequencies of the high-pass and low-pass terms of the transfer function. Compute the low and high cut-off (corner) frequencies in Hertz (Hz).
(Recall that cycle frequency $f = \omega/2\pi$).

Problem 6 (15 points)

Sketch the Bode plot for the magnitude of the following transfer function $\mathbf{H}(\omega)$. Nacre sure to label the slopes of the different sections of the plot and to include all relevant values on the vertical and horizontal axis.

$$H(\omega) = \frac{0.2(10+j\omega)}{j\omega(2+j\omega)}$$